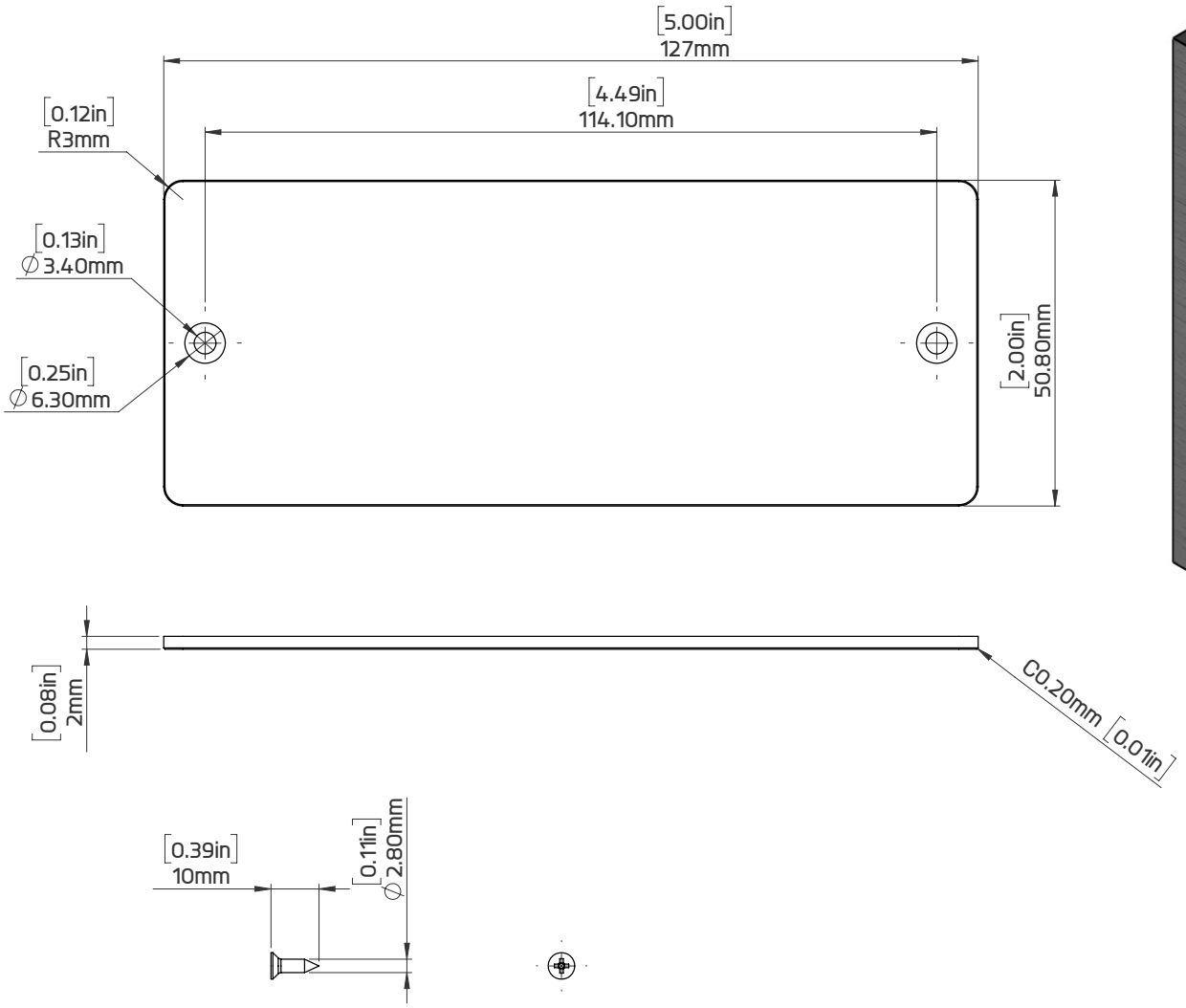

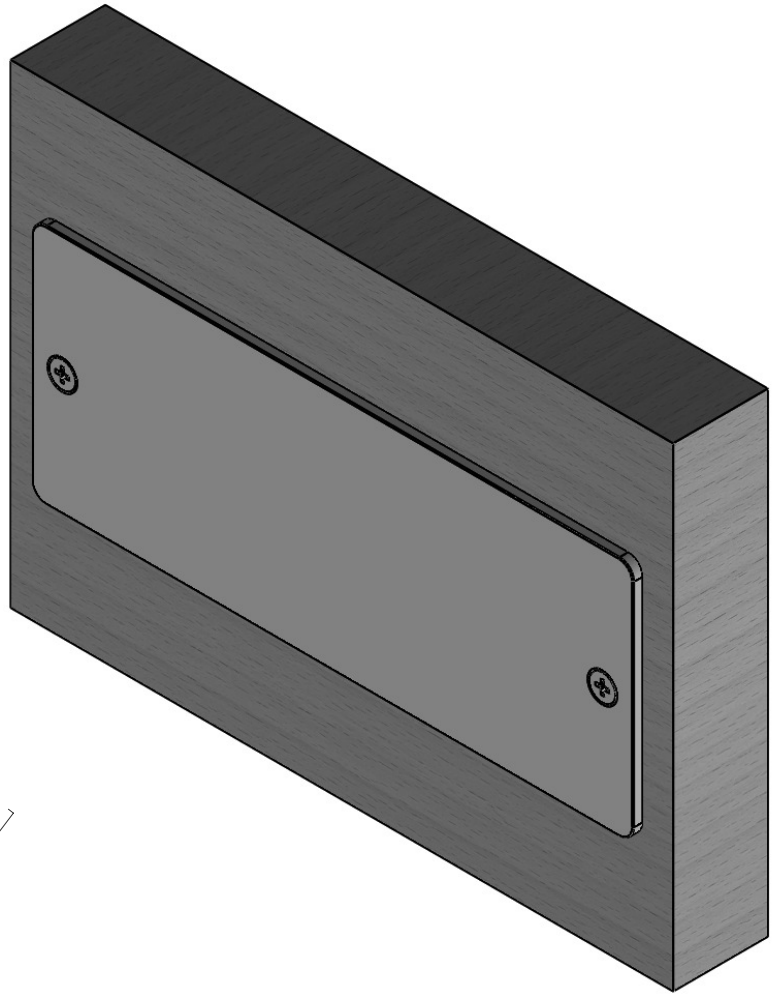

Quality : 2 Pcs

KEYLESS.CO	KEYLESS.CO.LLC 1825 W. Walnut Hill Lane, Suite102 Irving, Texas 75038 Phone 972.331.2770 I Info@Keyless.co Keyless.Co	Scale 4:3 8/27/2020 REV 1	NAME PLATE