SUVA NAME PLATE

ARCHITECTURAL SPECIFICATIONS

PART NUMBER:
NAME PLATE-R-SN

STANDARD FINISH: SATIN NICKEL

PART NUMBER:
NAME PLATE-R-MB

PREMIUM FINISH: MATTE BLACK MUNSELL N2/

PART NUMBER:
NAME PLATE-R-MW

PREMIUM FINISH: MATTE WHITE MUNSELL N9/

PART NUMBER:
NAME PLATE-R-SG

PREMIUM FINISH: SATIN GOLD PANTONE #871C

10% color discrepancy, and custom pricing options apply.

- Material: Zinc Alloy 5
- Finishes: Satin Nickel, Satin Gold, Matte Black, Matte White
- Satin nickel screws included (quantity: 2)
- CNC engraving recommended
- When disinfecting, mist with liquid that is at least 70% alcohol solution in order to maintain product integrity

FRONT VIEW

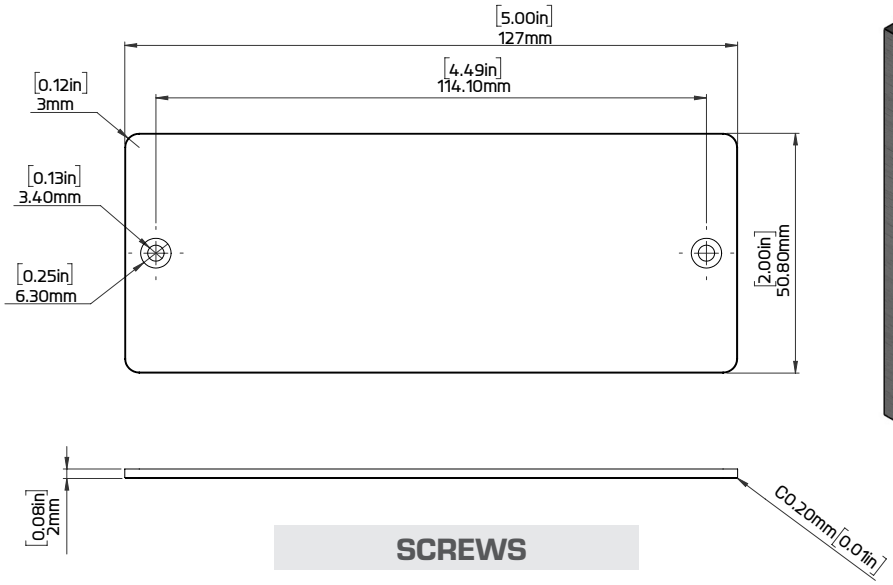

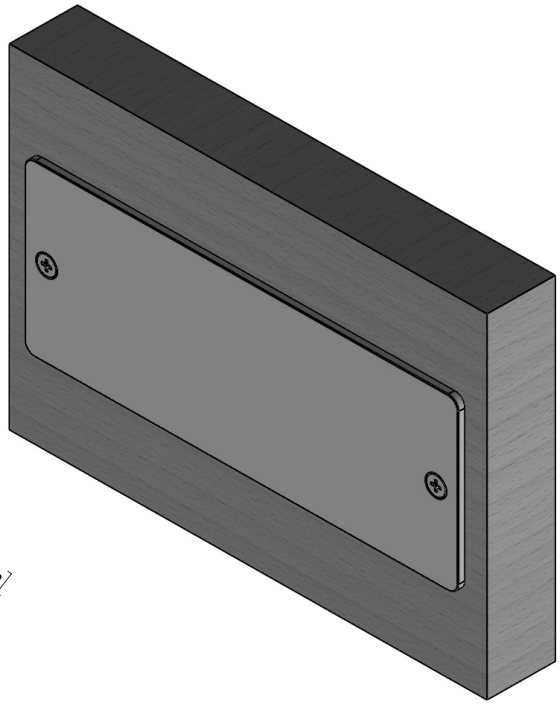

SCREWS

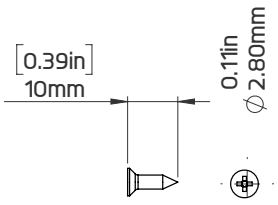

Quantity : 2 Pcs

Manufactured By: